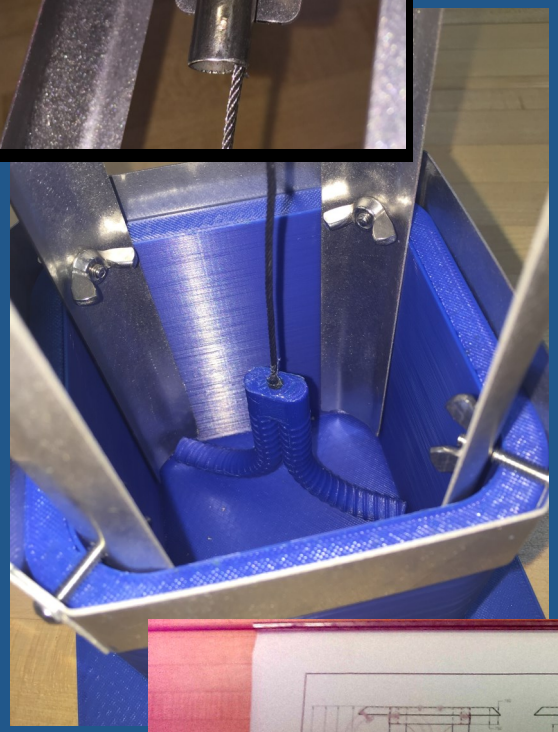

CHIMNEY CLEANER

Background of the Invention
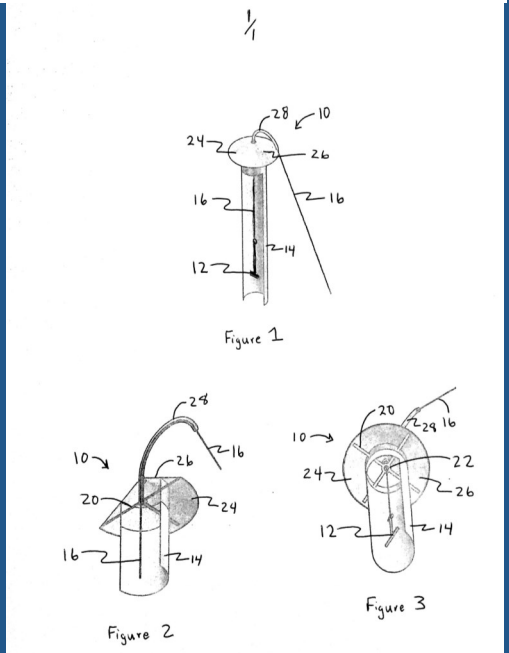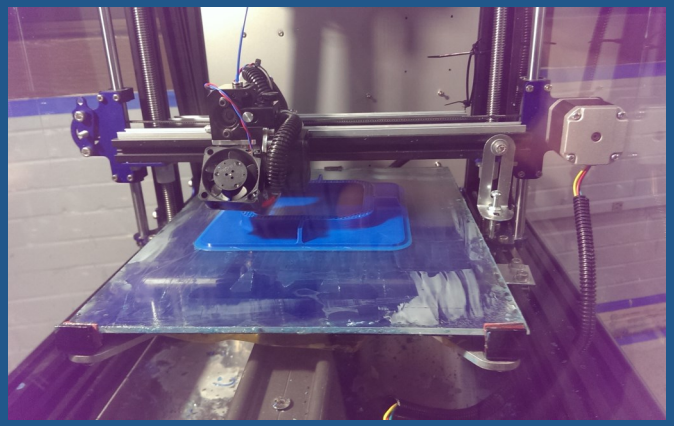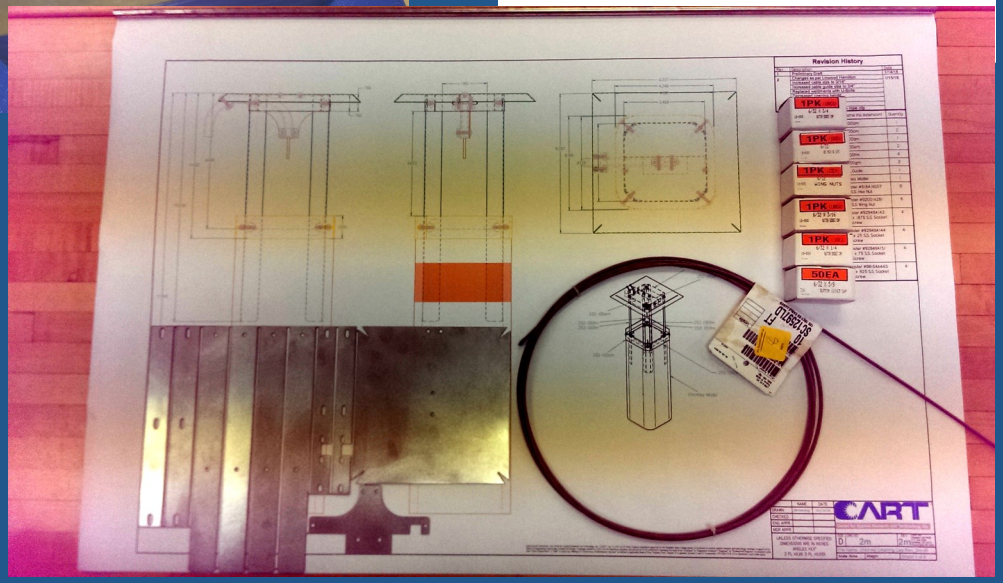
[0001] The chimney of a fireplace contains a build up of burned organic matter over time that accumulates in the chimney or chimney liner of a fireplace. The build up of organic matter within the chimney liner presents a fire hazard to the overall structure and must be cleaned out or otherwise removed from time to time. Typically, a chimney sweep service is scheduled to manually clean and clear the chimney liner of organic matter.